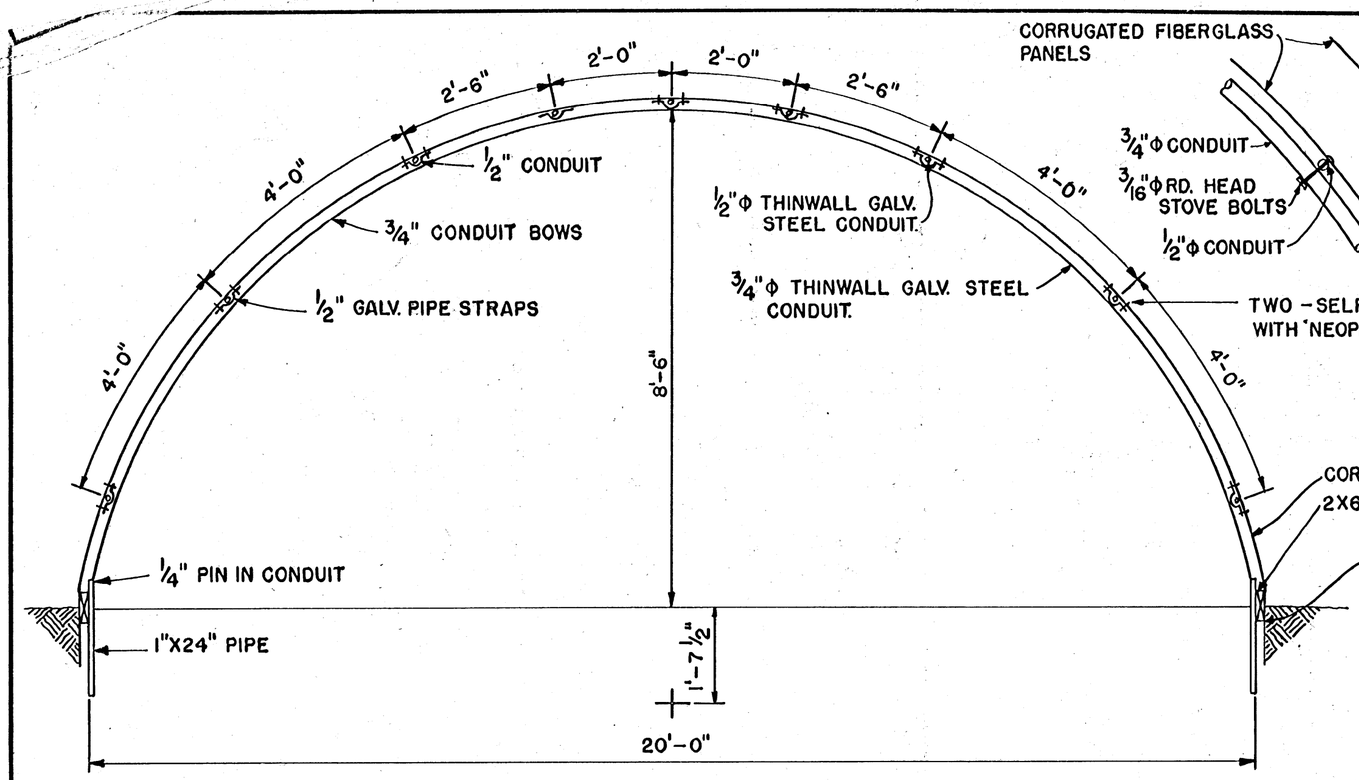

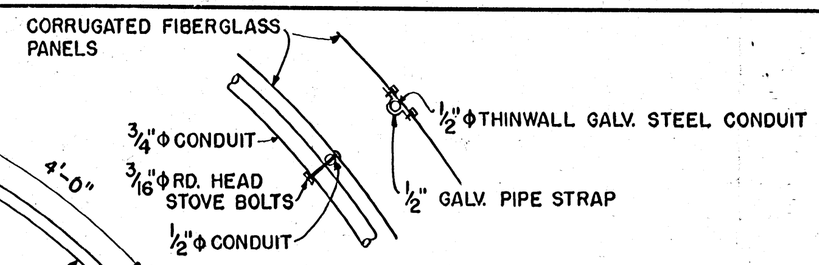

TWO - SELF TAPPING SCREWS, NO. 14 X 5/8" HEX. HEAD WITH NEOPRENE WASHER (SEE NOTE 1).

CORRUGATED FIBERGLASS COVER 33'-6" L X 50 1/2" W (48" COVERAGE)

2X6 OSMOSE TREATED

FIBERGLASS TO EXTEND 12" TO 16" IN GROUND. FASTEN WITH ALUMINUM SCREW SHANK NAILS WITH NEOPRENE WASHERS.

FIBERGLASS SECTION

NOTE 1:
NO. 14X5/8" HEX HEAD SELF-TAPPING SCREWS ARE SUPPLIED BY THE FIBERGLASS MANUFACTURER. THEY ARE INSERTED THROUGH THE FIBERGLASS AND PIPE STRAP. FASTEN FROM THE OUTSIDE IN EVERY 3RD. VALLEY OF THE CORRUGATED FIBERGLASS. THE OVERLAPPED EDGES ARE SECURED WITH SELF-TAPPING NO. 14X5/8" SCREWS WITH NEOPRENE WASHERS 12" O.C. ON THE RIDGES OF THE OVERLAP. (FOLLOW THE MANUFACTURER'S RECOMMENDATIONS.)

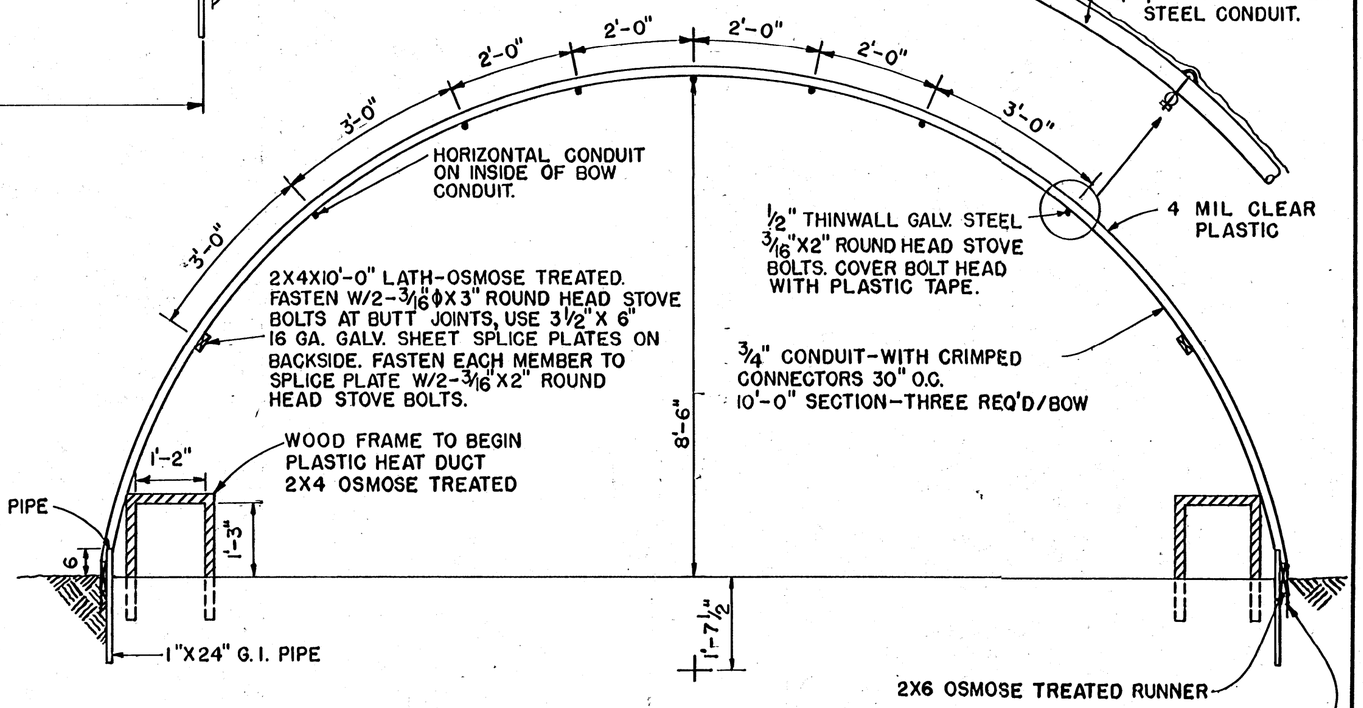

POLYETHYLENE COVERED SECTION

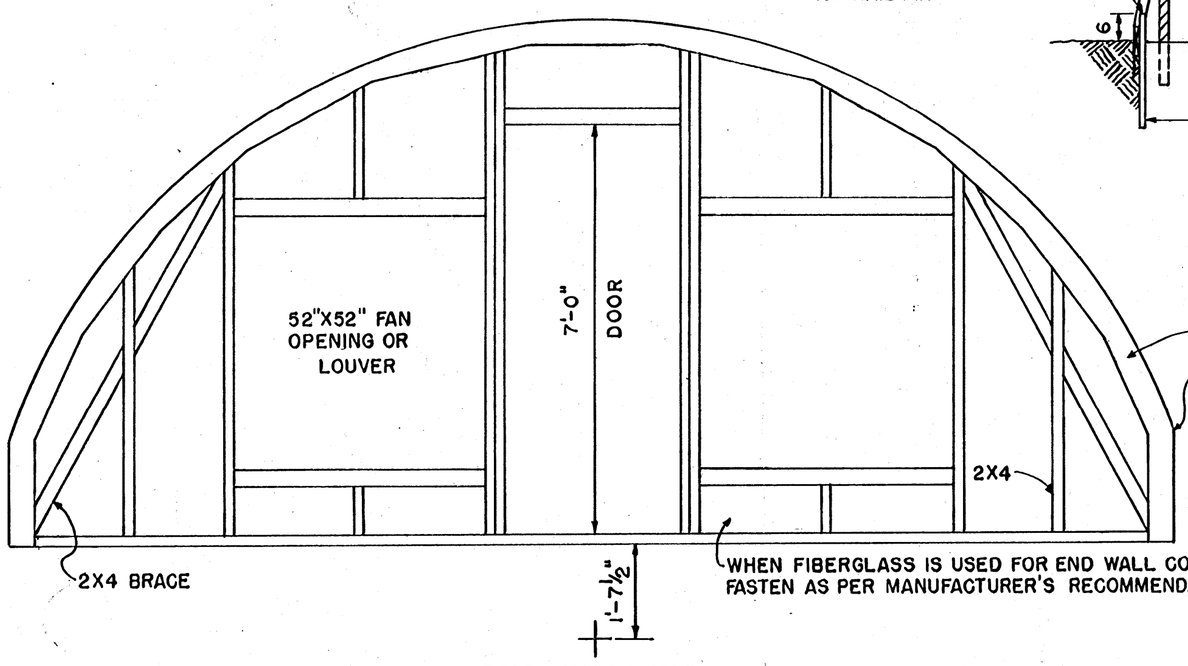

2X6 CUT ON CIRCLE

USE 1X4'S TREATED AS BATTENS WHEN POLYETHYLENE IS USED TO COVER ENDWALLS (APPROX. TEN 10' LENGTH PIECES NEEDED PER END.)

WHEN FIBERGLASS IS USED FOR END WALL COVERS, FASTEN AS PER MANUFACTURER'S RECOMMENDATIONS.

END FRAMING

NOTE:
CONSULT LOCAL BUILDING CODE AUTHORITIES BEFORE STARTING CONSTRUCTION.

12" 6" 0 1' 2'

SCALE: 1/2"=1'-0" UNLESS OTHERWISE NOTED.

COOPERATIVE EXTENSION WORK IN AGRICULTURE AND HOME ECONOMICS
STATE OF MISSISSIPPI
MISSISSIPPI STATE UNIVERSITY, AND
UNITED STATES DEPARTMENT OF AGRICULTURE COOPERATING

PLASTIC GREENHOUSES

MISS., '75	6217	SHEET 1 OF 2

BASED ON: MISS. STATE UNIV. PLAN NO. 6094-A. TRUCK CROPS RES. CTR.

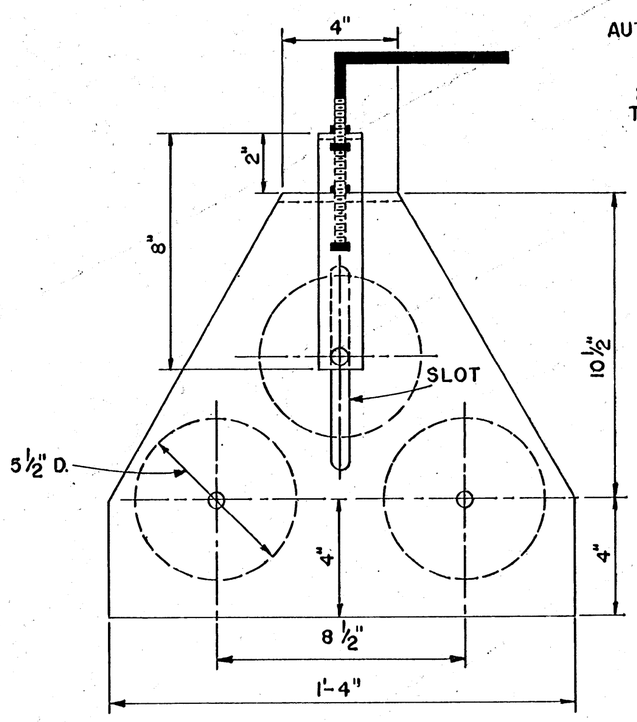

CONDUIT BENDER
SIDE VIEW

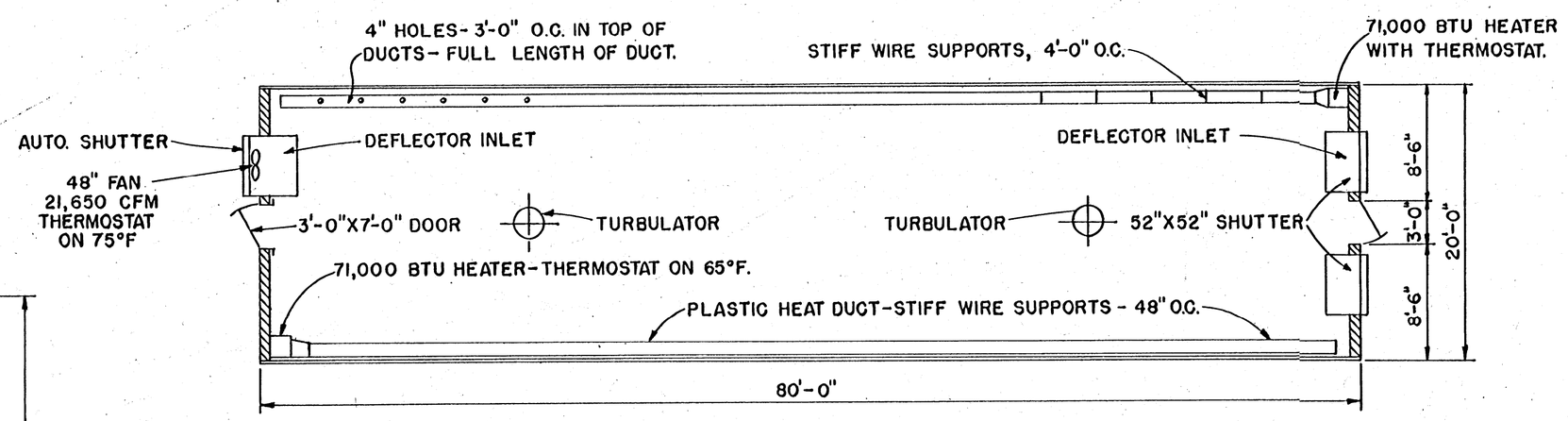

BASIC FLOOR PLAN
SCALE: 1/8"=1'-0"
12" 1' 3' 5' 7'
0 2' 4' 6' 8'

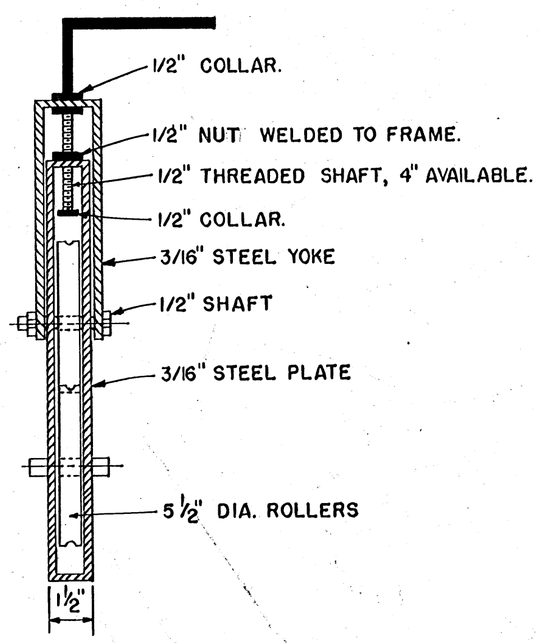

CONDUIT BENDER
SECTION VIEW

BILL OF MATERIALS

NO. REQ'D	DESCRIPTION
GRP I	FRAMING-2 ENDS AND SIDES
16	2X6X10' OSMOSE TRTD. NO.2 PINE
6	2X6X8' " " " " "
18	2X4X12' " " " " "
8	2X4X8' " " " " "
5 LBS.	6d COMMON NAILS
12 LBS.	10d " "
2	3'X7' SCREEN DOORS WITH HINGES AND LATCHES
GRP II	FIBERGLASS-TYPE FRAMING
72	10' LENGTHS 1/2" DIA. STEEL CONDUIT
99	10' LENGTHS 3/4" DIA. " "
63	1/2" CRIMPED TYPE COUPLING
66	3/4" " " "
300	3/16"X2" STEEL STOVE BOLTS-ROUND HEAD
132	1" BLACK PIPE (USED PIPE SATISFACTORY)
GRP III	POLYETHYLENE-TYPE FRAMING
	SAME AS FIBERGLASS WITH THE FOLLOWING ADDITIONAL ITEMS AND ONE ITEM CHANGED.
16	2X4X10' OSMOSE TRTD. NO. 2 PINE (ADDITIONAL)
56	10' LENGTHS 1/2" DIA. STEEL CONDUIT (CHANGED)
20	1X4X10' OSMOSE TRTD. NO. 2 PINE (BATTEN)
GRP IV	FIBERGLASS PANELS AND SUPPLIES
20	PANELS 33'-6"X50 1/2" WIDTH (48" COVERAGE)
4	PANELS 8'-9"
7	PANELS 6'-0"
4	PANELS 9'-4"
1200	1/2" PIPE STRAPS-EVERY 3RD. VALLEY ON ALL HORIZONTAL MEMBERS
2400	1/2" PIPE STRAP FASTENERS (NO. 14X5/8" HEX. HEAD SELF-TAPPING SCREWS)
300	ALUMINUM SCREW NAILS
700	SIDELAP FASTENERS (NO. 14X5/8" HEX. HEAD SELF-TAPPING SCREWS)
25	PLASTIC CORRUGATED CLOSURE STRIPS
24	" VERTICAL " "
GRP V	POLYETHYLENE FOR POLY-TYPE
1	ROLL 100'X32', 4 MIL. CLEAR
GRP VI	EQUIPMENT AND SUPPLIES-COMMON TO BOTH
1	48" SINGLE-SPEED FAN W/1HP MOTOR AND SHUTTER
2	52"X52" SPRING LOAD SHUTTERS
2	TURBULATORS-1/6 HP MOTOR
2	21 KW.-71,000 BTU INPUT HEATERS
160 FT.	6' WIDTH 2 MIL. POLY. FOR HEAT DUCTS
POLYETHYLENE—USE GRPS. I, II, III, V, & VI	
FIBERGLASS ——USE GRPS. I, II, IV, V, & VI	

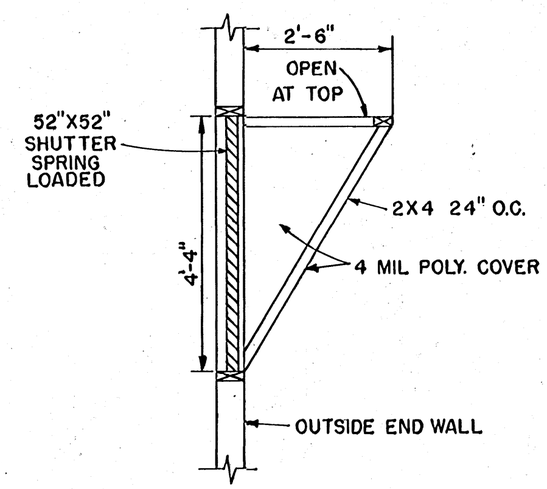

AIR INLET DEFLECTOR
SCALE: 1/2"=1'-0"
12" 6" 0 1' 2'

6" 3" 0
SCALE: 3"=1'-0" UNLESS OTHERWISE NOTED.

COOPERATIVE EXTENSION WORK IN
AGRICULTURE AND HOME ECONOMICS
STATE OF MISSISSIPPI
MISSISSIPPI STATE UNIVERSITY
AND
UNITED STATES DEPARTMENT OF AGRICULTURE COOPERATING

PLASTIC GREENHOUSES

MISS. '75	6217	SHEET 2 OF 2