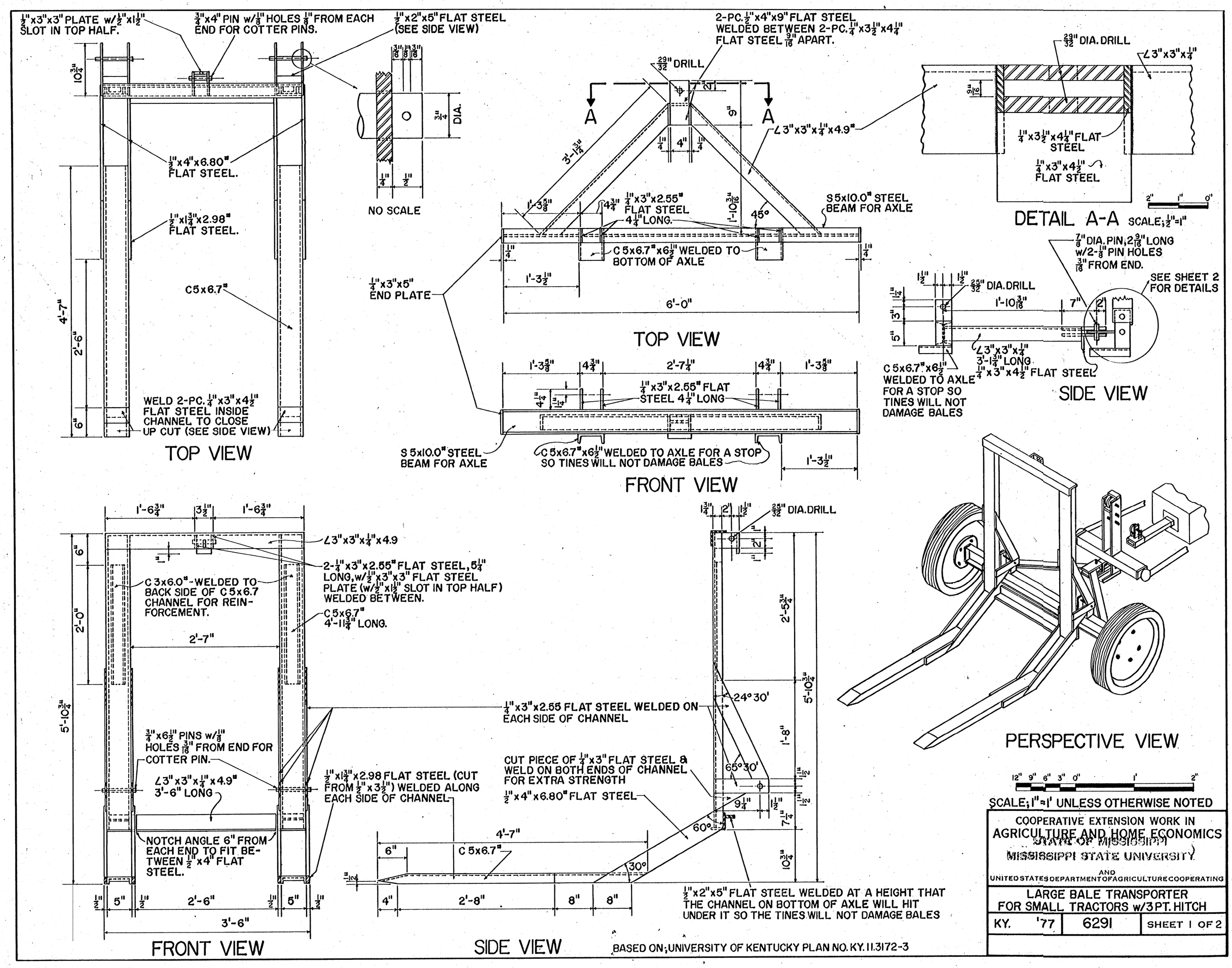
1/2"x3"x3" PLATE w/1/2"x1 1/2" SLOT IN TOP HALF.
3/4"x4" PIN w/1/8" HOLES 1/8" FROM EACH END FOR COTTER PINS.
1/2"x2"x5" FLAT STEEL (SEE SIDE VIEW)
10 3/4"
1/2"x4"x6.80# FLAT STEEL.
1/2"x1 3/4"x2.98# FLAT STEEL.
C5x6.7#
4'-7"
2'-6"
6"
WELD 2-PC. 1/4"x3"x4 1/2" FLAT STEEL INSIDE CHANNEL TO CLOSE UP CUT (SEE SIDE VIEW)
TOP VIEW
3/16" 1/8" 3/16"
3 1/4" DIA.
1/4" 1/2"
NO SCALE
2-PC. 1/2"x4"x9" FLAT STEEL WELDED BETWEEN 2-PC. 1/4"x3 1/2"x4 1/4" FLAT STEEL 9/16" APART.
29/32" DRILL
A A
9"
1/4" 4" 1/4"
3'-1 3/4"
∠3"x3"x1/4"x4.9#
1'-3 5/8"
4 3/4"
1/4"x3"x2.55# FLAT STEEL 4 1/4" LONG.
1'-10 3/16"
45°
S5x10.0# STEEL BEAM FOR AXLE
C5x6.7#x6 1/2" WELDED TO BOTTOM OF AXLE
1/4"x3"x5" END PLATE
1'-3 1/2"
6'-0"
TOP VIEW
1'-3 5/8" 4 3/4" 2'-7 1/4" 4 3/4" 1'-3 5/8"
1/4"x3"x2.55# FLAT STEEL 4 1/4" LONG
S5x10.0# STEEL BEAM FOR AXLE
C5x6.7#x6 1/2" WELDED TO AXLE FOR A STOP SO TINES WILL NOT DAMAGE BALES
1'-3 1/2"
FRONT VIEW
29/32" DIA. DRILL
∠3"x3"x1/4"
9/16"
1/4"x3 1/2"x4 1/4" FLAT STEEL
1/4"x3"x4 1/2" FLAT STEEL
2" 1" 0"
DETAIL A-A SCALE; 1/2"=1"
7/8" DIA. PIN, 2 9/16" LONG w/2-1/8" PIN HOLES 3/16" FROM END.
SEE SHEET 2 FOR DETAILS
1 1/2" 1 1/2" 29/32" DIA. DRILL
1 1/4" 3" 5"
1'-10 3/16" 7" 2"
∠3"x3"x1/4" 3'-1 3/4" LONG
C5x6.7#x6 1/2" WELDED TO AXLE FOR A STOP SO TINES WILL NOT DAMAGE BALES
1/4"x3"x4 1/2" FLAT STEEL
SIDE VIEW
PERSPECTIVE VIEW
1'-6 3/4" 3 1/2" 1'-6 3/4"
∠3"x3"x1/4"x4.9
6" 2'-0"
2-1/4"x3"x2.55# FLAT STEEL, 5 1/4" LONG, w/1/2"x3"x3" FLAT STEEL PLATE (w/1/2"x1 1/2" SLOT IN TOP HALF) WELDED BETWEEN.
C3x6.0#-WELDED TO BACK SIDE OF C5x6.7 CHANNEL FOR REINFORCEMENT.
C5x6.7# 4'-11 3/4" LONG.
2'-7"
5'-10 3/4"
1/4"x3"x2.55 FLAT STEEL WELDED ON EACH SIDE OF CHANNEL
3/4"x6 1/2" PINS w/1/8" HOLES 3/16" FROM END FOR COTTER PIN.
∠3"x3"x1/4"x4.9# 3'-6" LONG
1/2"x1 3/4"x2.98 FLAT STEEL (CUT FROM 1/2"x3 1/2") WELDED ALONG EACH SIDE OF CHANNEL
NOTCH ANGLE 6" FROM EACH END TO FIT BETWEEN 1/2"x4" FLAT STEEL.
1/2" 5" 1/2" 2'-6" 1/2" 5" 1/2"
3'-6"
FRONT VIEW
1 3/4" 2" 1 1/2" 29/32" DIA. DRILL
2 1/4"
2'-5 3/4"
5'-10 3/4"
24° 30'
1'-8"
CUT PIECE OF 1/4"x3" FLAT STEEL & WELD ON BOTH ENDS OF CHANNEL FOR EXTRA STRENGTH
65° 30'
1/2"x4"x6.80# FLAT STEEL
9 1/4"
1 1/2" 1 1/2"
7 1/4"
60°
10 3/4"
4'-7"
6" C5x6.7#
30°
1/2"
4" 2'-8" 8" 8"
1/2"x2"x5" FLAT STEEL WELDED AT A HEIGHT THAT THE CHANNEL ON BOTTOM OF AXLE WILL HIT UNDER IT SO THE TINES WILL NOT DAMAGE BALES
SIDE VIEW
BASED ON; UNIVERSITY OF KENTUCKY PLAN NO. KY. 11.3172-3
12" 9" 6" 3" 0" 1' 2"
SCALE; 1"=1' UNLESS OTHERWISE NOTED
COOPERATIVE EXTENSION WORK IN AGRICULTURE AND HOME ECONOMICS
STATE OF MISSISSIPPI
MISSISSIPPI STATE UNIVERSITY
AND
UNITED STATES DEPARTMENT OF AGRICULTURE COOPERATING
LARGE BALE TRANSPORTER FOR SMALL TRACTORS w/3 PT. HITCH
KY. '77
6291
SHEET 1 OF 2

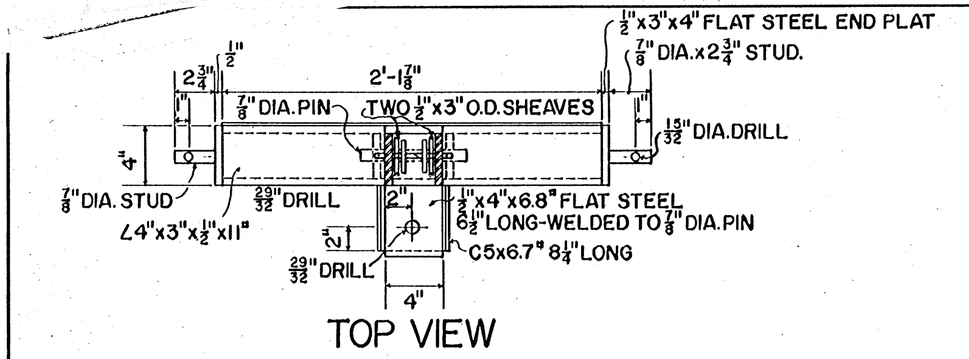

TOP VIEW

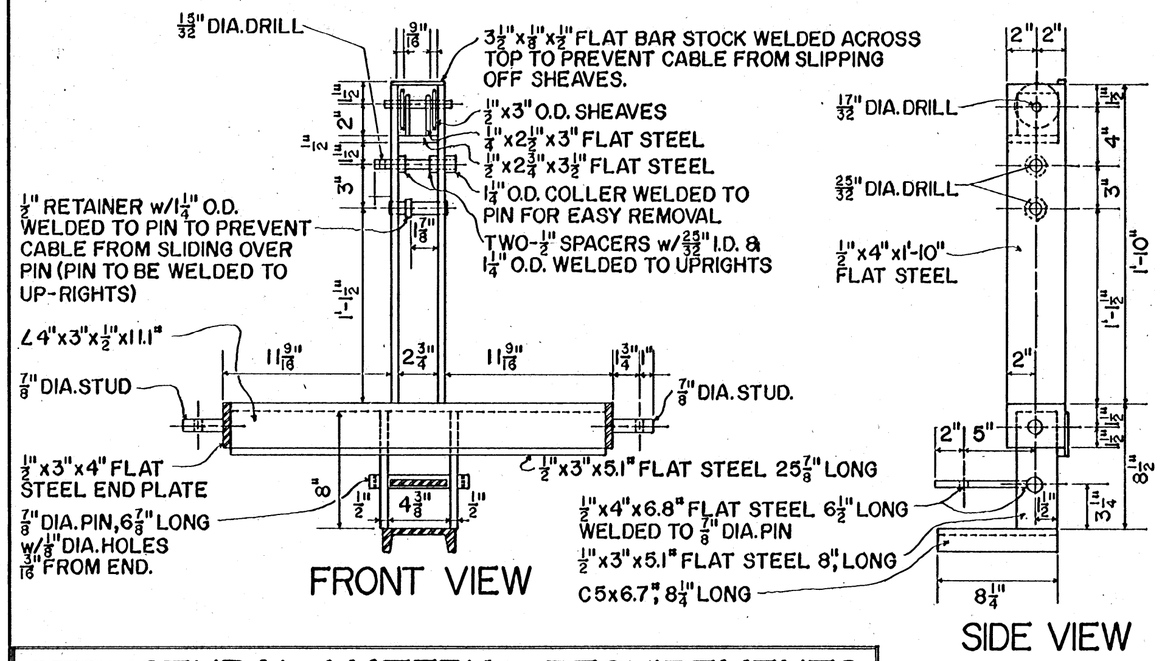

FRONT VIEW

SIDE VIEW

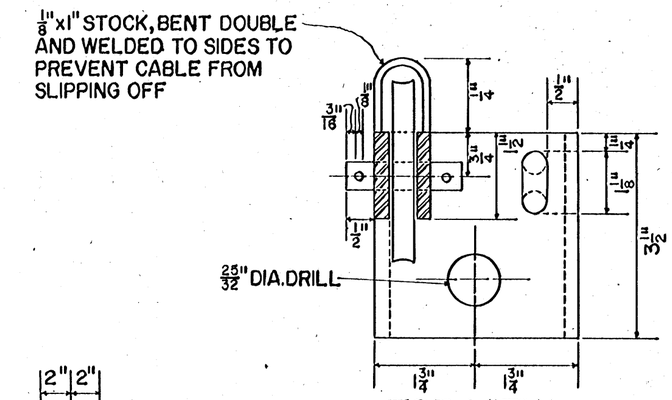

TOP VIEW

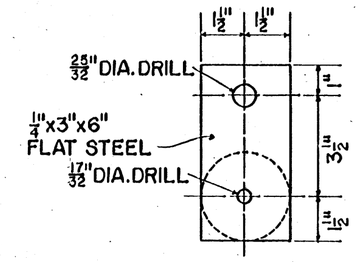

FRONT VIEW

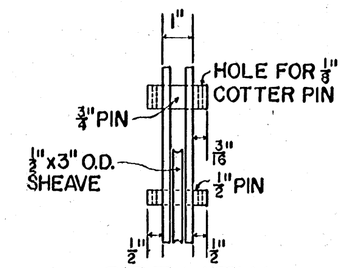

SIDE VIEW

TURNBUCKLE DETAIL

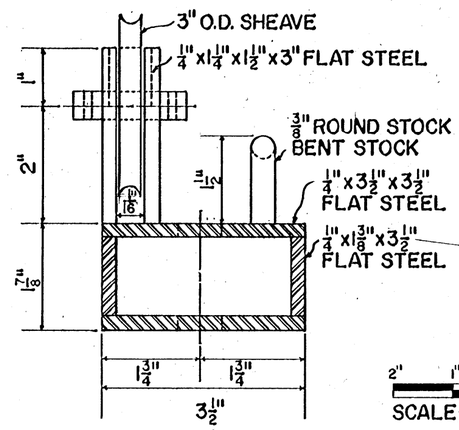

FRONT VIEW

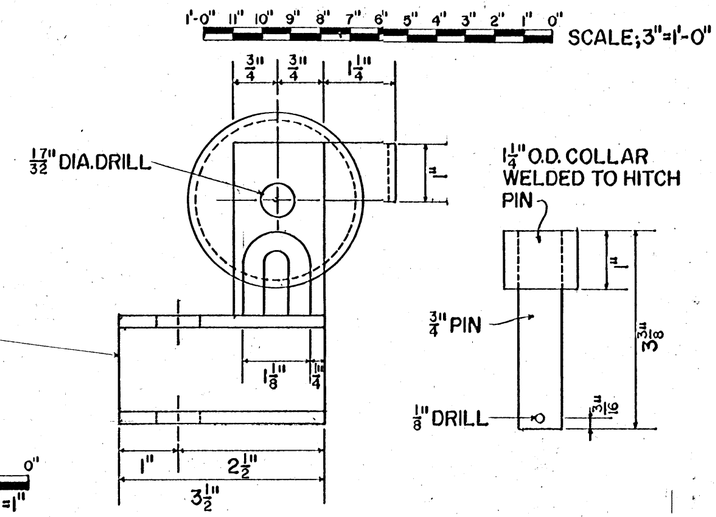

SIDE VIEW

STRUCTURAL MATERIAL REQUIREMENTS

MATERIAL	MIN. LENGTH REQ'D. (FT.)	WEIGHT
C3x6.0#/FT.	4.10	24.60
C5x6.7#/FT.	21.25	142.38
S5x10.0#/FT.	6.00	60.00
∠4"x3"x1/2"x11.1#/FT.	2.16	23.98
∠3"x3"x1/4"x4.9#/FT.	13.50	66.15
FLAT STEEL, 1/2"x4"x6.8#/FT.	18.00	122.40
FLAT STEEL, 1/4"x3"x2.55#/FT.	20.50	52.28
ROUND STEEL, 7/8"x2.0#/FT.	1.30	2.60
ROUND STEEL, 3/4"x1.5#/FT.	2.80	4.20
ROUND STEEL, 1/2"x0.67#/FT.	1.00	0.67
ROUND STEEL, 3/8"x0.36#/FT.	0.33	0.12
STEEL PIPE, 3/4" I.D.x1 1/4" O.D.x2.67#/FT.	0.33	0.89
FLAT STEEL, 1/2"x3"x5.1#/FT.	4.00	20.40
FLAT STEEL, 1/2"x3 1/2"x2.98#/FT.	1.66	4.95*
TOTAL WEIGHT-525.62 LBS.*		

*IMPORTANT NOTE: AFTER THE WINCHING CABLE HAS BEEN INSTALLED, THE LIFTING CAPACITY CAN BE INCREASED BY LENGTHING CHAIN BETWEEN THE RETAINING SLOT ⓒ AND THE TURNBUCKLE. HOWEVER, THIS ADJUSTMENT DECREASES THE CLEARANCE OF THE TINES DURING TRANSPORT.

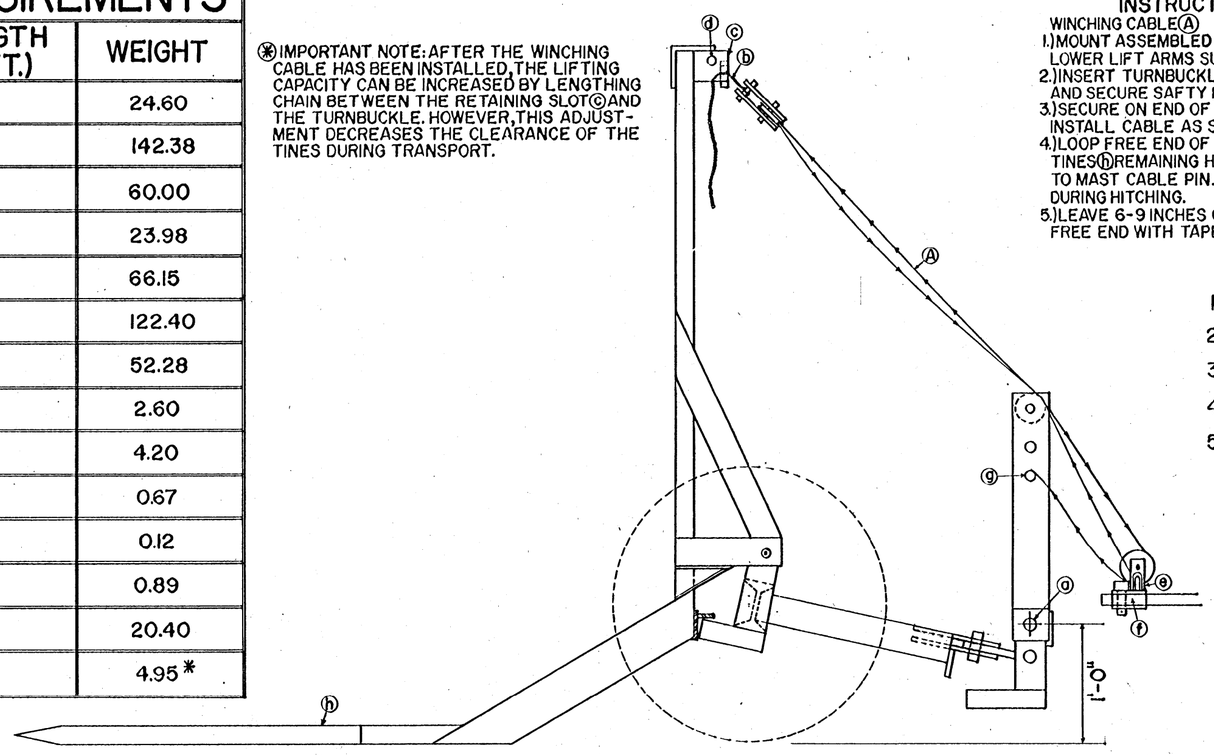

DIAGRAM FOR CABLE INSTALLATION & TRACTOR HOOK-UP

N.T.S.

INSTRUCTIONS FOR CABLE INSTALLATION (SEE DIAGRAM)

WINCHING CABLE Ⓐ

1.) MOUNT ASSEMBLED LIFTER APPARATUS TO 3-POINT TRACTOR HITCH AND POSITION LOWER LIFT ARMS SUCH THAT HITCH POINT ⓐ IS 12" ABOVE GROUND.
2.) INSERT TURNBUCKLE CHAIN ⓑ IN SLOT ⓒ AS NEAR TO THE TURNBUCKLE AS POSSIBLE AND SECURE SAFTY PIN ⓓ (SEE NOTE ✱).
3.) SECURE ON END OF CABLE TO EYE ⓔ ON DRAWBAR ASSEMBLY ⓕ AND PROCEED TO INSTALL CABLE AS SHOWN.
4.) LOOP FREE END OF CABLE AROUND MAST CABLE PIN ⓖ AND PULL CABLE TANT WITH TINES ⓗ REMAINING HORIZONTAL. ALLOW 4-6 INCHES OF SLACK IN CABLE AND SECURE TO MAST CABLE PIN. THIS IS TO ALLOW EASY ATTACHMENT OF DRAWBAR ASSEMBLY DURING HITCHING.
5.) LEAVE 6-9 INCHES OF EXCESS CABLE FOR POSSIBLE ADJUSTMENTS SECURING THE FREE END WITH TAPE.

OTHER MATERIALS NEEDED

1.) 2-15" WHEELS CENTERED ON AXLE.
2.) 1/4" STEEL CHAIN, 24" LONG.
3.) 1/4" DIA. STEEL CABLE, 14' LONG.
4.) 4-1/2"x3" O.D. CABLE SHEAVES w/1/2" BORE.
5.) 2-CABLE CLAMPS.

12" 9" 6" 3" 0" 1'

SCALE; 1 1/2"=1'-0" UNLESS OTHERWISE NOTED

COOPERATIVE EXTENSION WORK IN
AGRICULTURE AND HOME ECONOMICS
STATE OF MISSISSIPPI
MISSISSIPPI STATE UNIVERSITY
AND
UNITED STATES DEPARTMENT OF AGRICULTURE COOPERATING

LARGE BALE TRANSPORTER FOR SMALL TRACTORS w/3 PT. HITCH

KY. '77	6291	SHEET 2 OF 2